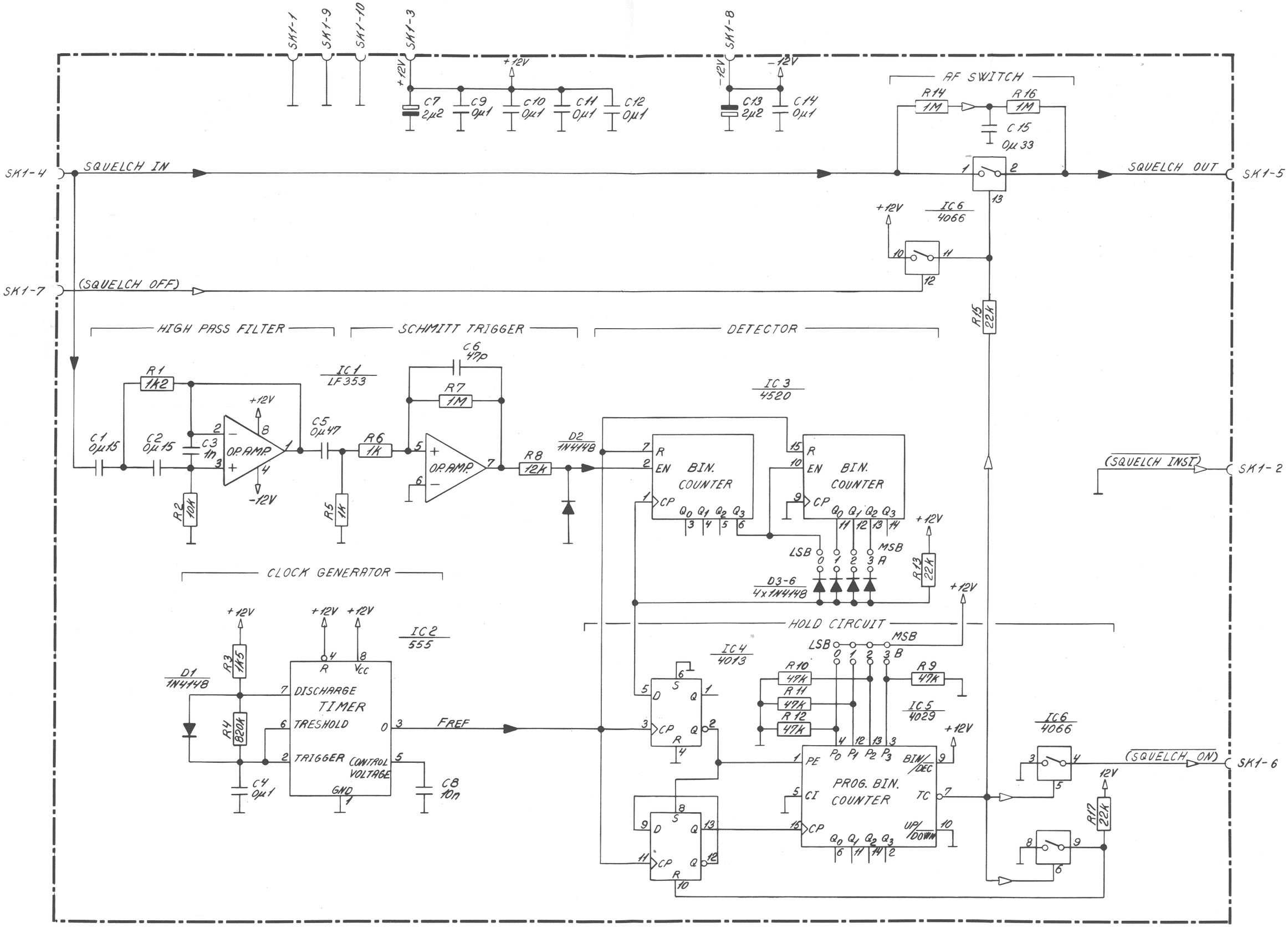

SQUELCH BOARD 602 VERSION 1A